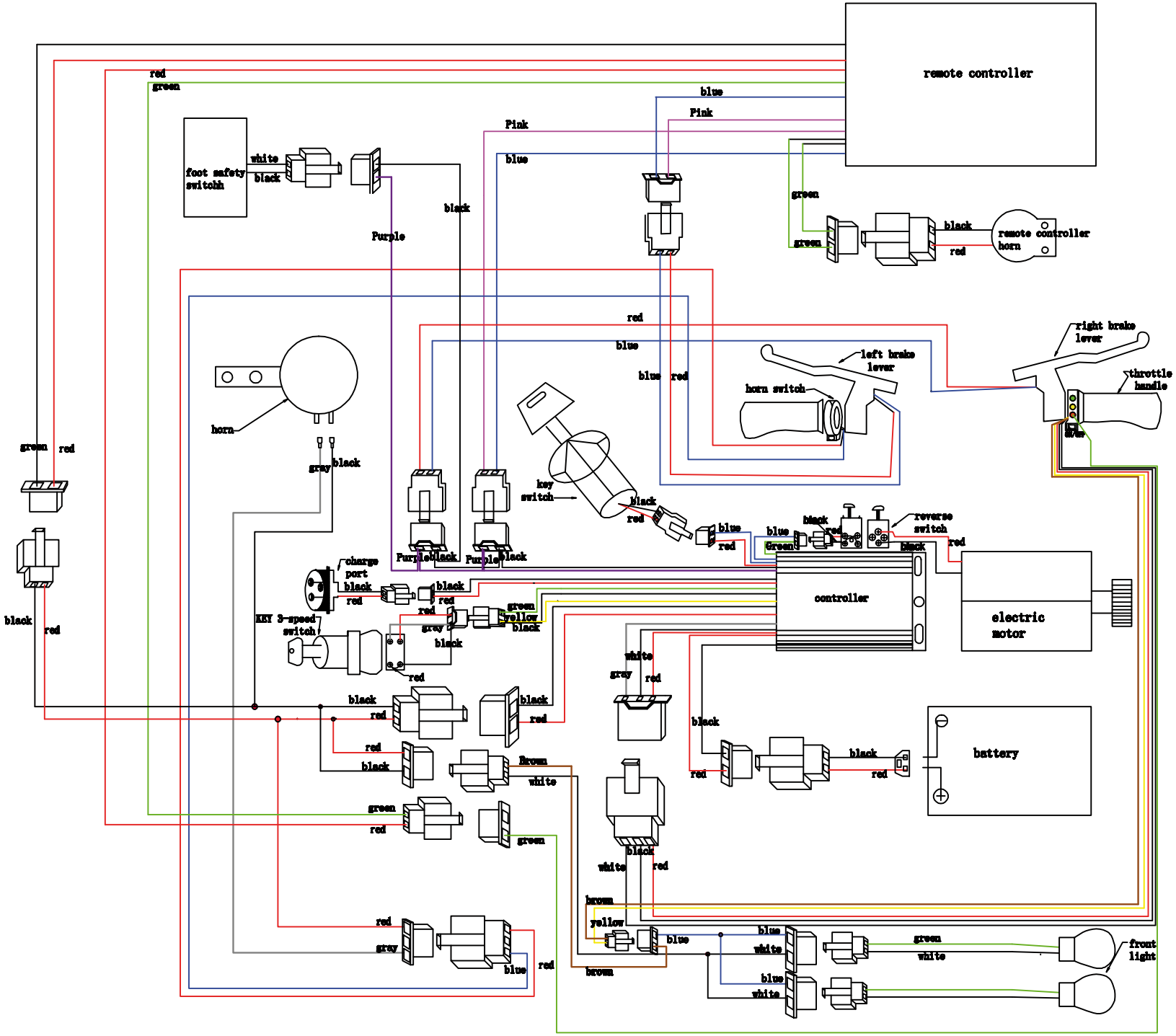
remote controller
red
green
blue
Pink
Pink
blue
foot safety switchh
white
black
black
Purple
green
black
remote controller horn
red
green
red
blue
blue
red
left brake lever
horn switch
right brake lever
throttle handle
horn
gray
black
key switch
black
red
blue
red
blue
Green
black
red
reverse switch
black
red
green
red
Purple
black
Purple
black
charge port
black
red
black
red
KEY 3-speed switch
red
gray
green
yellow
black
black
controller
electric motor
white
gray
red
black
red
black
red
black
red
black
red
black
red
Brown
white
green
red
green
black
white
red
black
red
battery
brown
yellow
blue
blue
white
blue
white
green
white
front light
red
gray
blue
red
brown